BIRECIPROCAL LATTICE WAVE DIGITAL FILTERS WITH ALMOST LINEAR PHASE RESPONSE

Artur Wróblewski, Thomas Erl and Josef A. Nossek

Munich University of Technology
Arcisstr. 21, 80333 Munich, Germany
e–mail: Artur.Wroblewski@ei.tum.de

ABSTRACT

In this paper two methods for designing almost linear phase wave digital filters are compared. First of them is based on designing a minimum phase filter and equalizing its phase response by some all-pass equalizer. The second one utilizes previously published method of designing almost linear phase filters without the equalizer. Several improvements to both approaches are introduced and a comparison of the two methods is given.

1. INTRODUCTION

In today's advanced technologies power consumption has become the main limiting factor for many applications. Starting with processors for personal computing through terminals for mobile communications systems, down to applications like bionic ear. In many of those applications digital filtering is a very important issue and represents one of the most power consuming subsystems. Therefore it is important to compare different digital filter architectures to find the one that best fits the requirements for low-power design while maintaining all properties of a good filtering operation. For a filter designer the fastest and most simple solution is to employ FIR filters. There exist many tools to do so, and the design process is reduced to a few simple mouse clicks. However in most cases a FIR solution will not be the most efficient one, thus not optimal in terms of low power design. Therefore, in this paper we explore IIR solutions. The greatest disadvantage of IIR filters is the non-linear phase response. However, many methods of approximating it have been presented in the past[6][7][10][11][1][9]. Even if with none of these methods perfect phase linearity can be achieved, the error can be very small and is often insignificant for practical applications. Moreover, in many cases the phase linearity can be traded for effort, which leads to good low power solutions and gives the designer more freedom than in the FIR case. Since all algorithms for designing linear phase bireciprocal wave digital filters found in the literature are based on two principles, for this comparison one from each family has been chosen. In the first method, introduced by [9], a minimum phase filter is being designed and an all-pass equalizer in cascade is then employed. The second method is based on [6] and allows for designing almost linear phase filters without the need of an equalizer. Several improvements to both methods are introduced here to obtain either better convergence of the algorithm or more accurate results. For the comparison we have chosen bireciprocal wave digital filters. This class of half-band filters is the most efficient one and therefore the overhead for obtaining linear phase response is the greatest. Thus, it can be seen as the worst case approach and will allow for a fair comparison to FIR half-band filters.

This paper is structured as follows. In Section 2 a short introduction to bireciprocal wave digital filters is given. In Section 3 the method based on all-pass equalization is described. Section 4 contains a description of the method of designing linear phase wave digital filters. A comparison of the results is given in Sec. 5 and Section 6 concludes the paper.

2. BIRECIPROCAL WAVE DIGITAL FILTERS

Wave digital filters (WDFs) are known to have many advantageous properties. They have low coefficient sensitivity, good dynamic range, and especially, good stability properties under quantization effects. Out of all wave digital filters the lattice wave digital filter is the most attractive one. Each WDF has a corresponding filter in the reference domain. The design can therefore be carried out in the analog domain using classical filter approximations. Then a transformation from analog to digital domain can be performed. For lattice WDF explicit formulae are given in [5]. However there exist no closed form solutions for filters satisfying given requirements on both magnitude and phase response.

A lattice WDF is a two-branch structure where each branch realizes an all-pass filter [3]. Out of several ways of realizing them [2] the most attractive one is to use cascaded first-order and second-order sections. They are realized using symmetric two-port adaptors. A bireciprocal (half-band) lattice WDF is a special case of lattice WDF. In this case every other coefficient of the filter becomes 0 [12], which results in a structure shown in Fig. 1. Moreover, when the application is in a decimator or interpolator by a factor of 2, the filter can run at the lower sampling rate [4].

The transfer function of a bireciprocal lattice WDF can be written as

$$H(z) = \frac{1}{2}(H_0(z^2) + z^{-1}H_1(z^2))$$

where the transfer function $H_0(z^2)$ corresponds to the lower branch in Fig. 1. The transfer function of the filter and its complementary transfer function are power complementary. Therefore for bireciprocal lattice WDFs

$$|H(e^{j\omega T})|^2 + |H(e^{j\omega T-\pi})|^2 = 1$$

which means that the passband and stop-band edges are related by $\omega_c T + \omega_s T = \pi$ with ω_c and ω_s being respectively the passband

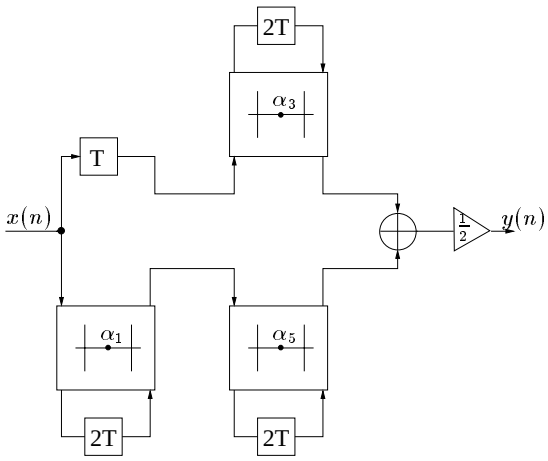

Fig. 1. A 7th-order bireciprocal lattice wave digital filter.

and stop-band cutoff frequencies. The consequence is that the passband ripple will be extremely small for practical requirements on the stop-band attenuation. Thus the bireciprocal WDFs have the efficiency of a FIR half-band filter in terms of reduced computational effort(compared to not half-band counterparts), while preserving the main advantages of IIR filters over FIR, which are sharp transitions for low order filters. Moreover, it is a well known fact, that wave digital filters have very low coefficient sensitivity. Thus it is possible to represent filter coefficients utilizing only a few bits. This could allow for decreasing the size of applied multipliers or even replacing them by shift and add operations.

As can be seen from Fig. 2 the main drawback of lattice WDFs is the non-linear phase response. However, many methods for obtaining almost linear phase of IIR filters have been presented in the past [7][10][1]. Two of them are described in the following.

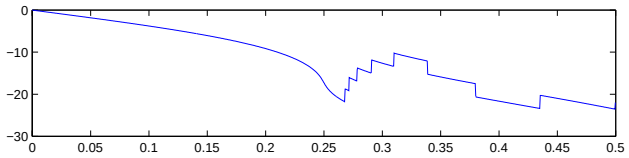

Fig. 2. Phase response (radians) of a 17th order bireciprocal wave digital filter.

3. ALL-PASS EQUALIZATION FOR NON-LINEAR PHASE FILTERS

One of the most widely used applications of all-pass filters is in group delay equalization of IIR filters. However, there exist no easy-to-use method or a closed form solution for this problem. The existing formulations are based on numerical approximation. The method used here is based on eigenfilter formulation and has been presented in [9]. Traditionally, eigenfilter techniques have been used for the design of linear-phase FIR filters where the least-squares error can readily be given as a quadratic form. However, for phase approximation a quadratic form is not available due to non-linear trigonometric functions involved. Nevertheless the authors use approximate least-squares phase error solutions, which enable eigenfilter formulation. One of the great advantages of this approach is the fact, that it can be applied to any class of filters and is capable of equalizing almost any phase response. This is not the case for the approach described in Sec. 4 since it's designed for lattice wave digital filters only. However, as will be shown, the all-pass approximation is in many cases not as efficient as the approach described in Section 4. Nevertheless, very good results have been achieved with this method, even if a modification to the algorithm had to be introduced to achieve best possible results. The authors of [9] estimate the nominal group delay of the all-pass equalizer from the formula given in [8] to

$$\tau_0 = M\tau_0^{max}$$

with

$$\tau_0^{max} = \frac{N\pi - \Phi_H(\omega_U)}{\omega_U}$$

where N is the order of the all-pass equalizer, ω_U is the passband cutoff frequency and $\Phi_H(\omega_U)$ the phase response to be equalized at that frequency. $M = 0.8$. This estimation is quite good (but not the best) for wider band signals. For narrow band signals best solutions can be achieved for $M = 0.2...0.8$ depending on the passband width and order of the equalizer. In particular for the example given in [9] of a 6th-order Chebyshev II low-pass filter with a 40 dB stop-band attenuation and 0.3π stop-band cutoff frequency, with phase response equalized by an order 6 all-pass, the optimal choice is $M = 0.7145$. For this choice of M phase error decreases from $2.7 \cdot 10^{-2}$ to $3.57 \cdot 10^{-4}$ and the group delay ripple from 1.585355 to 0.045426. These differences are quite significant. After performing numerous simulations we propose the following initial guess for M:

$$M = -N/250 + 0.55 + 0.45 \cdot 2^{-1/N} \cdot sin(2 \cdot (5.6 \cdot \omega_c - 4 + \frac{1}{2 \cdot N}))$$

with ω_c being the passband edge of the filter. This guess tends to be very close to the optimum value. In some cases the algorithm may not converge with the initial value given here. However, considering significant improvements obtained by variation of M, it may be worth to vary this parameter around the initial guess. In many cases phase error will be by orders of magnitude lower than for the choice of M proposed by the authors of [9]. Please note that this guess has been validated for bireciprocal lattice WDFs only and may not be accurate in general case.

4. ALMOST LINEAR PHASE BIRECIPROCAL WAVE DIGITAL FILTERS

In this paper we concentrate on bireciprocal lattice wave digital filters. They represent the most efficient, in terms of computational effort, family of IIR filters and are therefore of great interest. It is therefore very important to take a look at the methods dedicated to the design of linear phase bireciprocal lattice WDFs to be able to compare this solution to all-pass equalization. It is possible to obtain a bireciprocal lattice WDF with approximately linear phase by letting one of the branches in Fig. 1 consist of pure delays [7][10][11]. The other branch is a general all-pass function in z^2, which can be realized using cascaded first and second orders sections (Fig. 3). The transfer function of a linear-phase lattice WDF

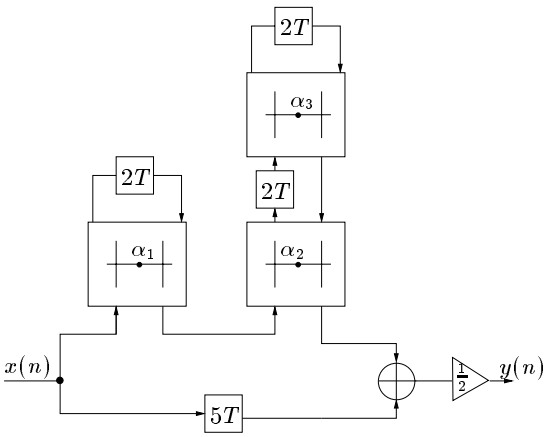

Fig. 3. Structure of an 11th order almost linear phase bireciprocal lattice WDF.

is

$$H(z) = H_0(z^2) + z^{-2R+1}, \qquad R = 1, 2, ...$$

with R being the number of attenuation zeros and the overall frequency response is given as

$$H(e^{j\omega T}) = \frac{1}{2}(e^{j\Phi_0(\omega T)} + e^{-j(2R+1)\omega T})$$

In the passband the phase response of branch zero, $\Phi_0(\omega T)$, must approximate the phase response of the other branch, which in this case is linear. This forces the overall phase response to be approximately linear in the passband. The design algorithm considered here is based on [6], which is a special case of algorithm presented in [10][11]. It considers filters which are characterized by the property of having the maximal number of attenuation zeros for a given number of degrees of freedom (number of filter coefficients). The main disadvantage of the algorithm is that it needs an initial guess of the values of the frequencies at which the attenuation zeros occur. With the formula given in [6] only filters up to order 23 converged. To achieve convergence also for higher orders of the filter we propose to choose

$$\omega_r^{(0)}T = c\frac{1}{2}sin^{-1}(sin(\omega_c T)sin(\frac{(2(R+r)+1)\omega_0 T + r\pi}{2R+1}))$$

instead of

$$\omega_r^{(0)}T = \frac{1}{2}sin^{-1}(sin(\omega_c T)sin(\frac{r\pi}{2R+1})), \qquad r = 1, ..., R$$

for the initial solution. In this equations is R the number of attenuation zeros, ω_c the passband cutoff frequency, $\omega_0 T = 1.2 \cdot \pi/180$ and $c = 0.96$. Moreover, faster and better convergence has been achieved by introducing variable step size in different iterations. Still, some convergence problems exist. However, they occur only if the filter order is much too high for the chosen transition band. When converging, stop-band attenuation of such a filter would probably be in the range of 300 dB,which is not feasible for practical applications and the computed numbers are limited by machine precision. Unfortunately, the algorithm does not allow for specifying the attenuation that has to be achieved. The specifications that can be modified are filter order and the transition band. There's also no way to trade off phase linearity for filter complexity. However, the achievable phase linearity and group delay ripple are very small. Even if the order of such designed filter will be higher than that of the corresponding minimum phase solution, one has to take into account that the number of multipliers in this structure is only $(order + 1)/4$. These filters are thus as efficient, when comparing effort per filter order, as FIR half-band filters and a comparison to FIR solution is straightforward.

5. EXPERIMENTAL RESULTS

The all-pass equalization gives more degrees of freedom allowing the designer to choose how good or bad the approximation of the linear phase will be. It is not possible for the other approach described here. Therefore we first applied the method of Section 4 to obtain linear phase filters, then we have evaluated the results to extract information on stop-band attenuation and phase error. This specifications have then been used to design minimum phase filters according to formulae given in [5]. The phase response of these filters has then been equalized in a way that the phase error of the resulting filter was not larger than the constraint given by linear phase approach. The results are summarized in Table 1. They are sorted in descending order beginning with the wide transition bands (120 degrees) and ending with very narrow one (95 degrees). Since the filters are half-band, stop-band and passband frequencies are symmetric around 90 degrees. Only results with stop-band attenuation between 70 dB and 100 dB are presented. Clearly, even if phase response error is the same in both cases, the group delay error of the equalized solution is always larger than for the linear phase WDF. Also the maximum group delay is a little higher. For the realization of the all-pass we propose to apply wave digital filters. Also for this purpose they are very efficient and only one multiplier per equalizer order is required. As the numbers in brackets indicate even then the combination of minimum phase filter and equalizer is significantly less efficient than the almost linear phase solution. However, in many practical cases the requirements on the phase error will be orders magnitude lower than in the examples from Table 1 and applying an equalizer could lead to an advantageous solution.

6. CONCLUSION

In this paper a comparison of two approaches to almost linear phase bireciprocal wave digital filters has been discussed. Several improvements concerning convergence of the algorithms as well as their accuracy have been proposed. The results show significant differences in computational effort for the realization of both approaches. The solution based on a cascade of minimum phase filter and equalizer could result in as much as $10\% - 80\%$ more effort as for its linear-phase counterpart. However, in many applications the specification on phase linearity could be orders of magnitude lower than in the examples presented here and result in lower equalizer complexity. vary depending on requirements on phase linearity. Moreover, if applying solution of Section 4 in a multistage structure all filters in the cascade have to be linear phase, which results in higher filter orders. On the other hand the all minimum phase filters in the cascade require only one equalizer as the last element in the cascade. In some cases the order of

Stop-band Frequency (Degrees)	Stop-band Attenuation (dB)	Phase Error (radians)	Order		Group Delay Error (Sampling intervals)		Max Group Delay (Sampling intervals)	
			LPF [MULT]	MPF [MULT]	LPF	MPF	LPF	MPF
120	75.4	$2 \cdot 10^{-4}$	19 [5]	9+4 [8]	$9.9 \cdot 10^{-3}$	$1.3 \cdot 10^{-2}$	9.01	9.73
120	86.3	$6 \cdot 10^{-5}$	23 [6]	9+5 [9]	$3.7 \cdot 10^{-3}$	$4.7 \cdot 10^{-3}$	11.00	11.26
120	97.1	$1 \cdot 10^{-5}$	27 [7]	11+7 [12]	$1.4 \cdot 10^{-3}$	$1.5 \cdot 10^{-3}$	13.00	15.14
115	74.8	$2 \cdot 10^{-4}$	23 [6]	9+5 [9]	$1.2 \cdot 10^{-2}$	$1.6 \cdot 10^{-2}$	11.02	11.41
115	83.9	$8 \cdot 10^{-5}$	27 [7]	11+7 [12]	$5.6 \cdot 10^{-3}$	$7.5 \cdot 10^{-3}$	13.00	15.33
115	92.8	$3 \cdot 10^{-5}$	31 [8]	11+7 [12]	$2.5 \cdot 10^{-3}$	$4.4 \cdot 10^{-3}$	15.00	15.59
110	70.9	$3 \cdot 10^{-4}$	27 [7]	9+6 [10]	$2.1 \cdot 10^{-2}$	$2.9 \cdot 10^{-2}$	13.03	13.19
110	78.2	$1 \cdot 10^{-4}$	31 [8]	11+8 [13]	$1.1 \cdot 10^{-2}$	$2.0 \cdot 10^{-2}$	15.01	17.00
110	85.3	$6 \cdot 10^{-5}$	35 [9]	11+8 [13]	$6.3 \cdot 10^{-3}$	$1.1 \cdot 10^{-2}$	17.01	17.45
110	92.3	$3 \cdot 10^{-5}$	39 [10]	13+10 [16]	$3.3 \cdot 10^{-3}$	$8.9 \cdot 10^{-3}$	19.00	21.44
105	74.6	$2 \cdot 10^{-4}$	39 [10]	11+9 [14]	$2.1 \cdot 10^{-2}$	$2.3 \cdot 10^{-2}$	19.03	19.49
105	79.9	$1 \cdot 10^{-4}$	43 [11]	11+10 [15]	$1.3 \cdot 10^{-2}$	$1.3 \cdot 10^{-2}$	21.02	21.06
105	85.2	$7 \cdot 10^{-5}$	47 [12]	13+12 [18]	$8.5 \cdot 10^{-3}$	$6.0 \cdot 10^{-3}$	23.01	25.46
105	90.5	$3 \cdot 10^{-5}$	51 [13]	13+12 [18]	$5.3 \cdot 10^{-3}$	$4.8 \cdot 10^{-3}$	25.00	25.58
105	95.7	$2 \cdot 10^{-5}$	55 [14]	13+14 [20]	$3.3 \cdot 10^{-3}$	$2.5 \cdot 10^{-3}$	27.00	27.28
100	78.4	$1 \cdot 10^{-4}$	63 [16]	13+16 [22]	$2.3 \cdot 10^{-2}$	$1.1 \cdot 10^{-2}$	31.03	33.23
100	81.9	$9 \cdot 10^{-5}$	67 [17]	13+18 [24]	$1.7 \cdot 10^{-2}$	$6.7 \cdot 10^{-3}$	33.02	35.12
100	88.9	$4 \cdot 10^{-5}$	75 [18]	15+26 [33]	$9.5 \cdot 10^{-3}$	$2.9 \cdot 10^{-3}$	37.01	43.53

Table 1. Comparison of the two methods (Phase error in radians, group delay in sampling intervals). LPF - Almost Linear Phase Filter, MPF - Minimum Phase Filter with all-pass equalizer, MULT - number of multipliers.

the linear-phase filter could be very high, which could cause problems due to computational accuracy. Higher coefficient and/or data word-length may be necessary in such cases. The numbers presented here do not take into account these effects, which represent a topic for further study. The comparison presented here seems to gain on importance from the point of view of low-power design and almost linear phase IIR filters may represent a good alternative to today's standards. There are many applications ranging from $\Sigma\Delta$ analog-to-digital converters to any kind of portable devices like MP3-Players or terminals for mobile communication systems, where computational efficiency is extremely important and power consumption the main limiting factor. Especially in mobile communication, where external interferers like multi-path propagation do not allow for perfect symbol synchronization, strict phase linearity may not be a required feature.

7. REFERENCES

[1] M. Abo-Zahhad, M. Yaseen, and T. Henk. Design of Lattice Wave Digital Filters with Prescribed Loss and Phase Specifications. *ECCTD'95 Istanbul, Turkey*, 1:761–764, 1995.

[2] A. Fettweis. Wave Digital Filters: Theory and Practice. *Proc. IEEE*, 74(2):270–327, February 1986.

[3] A. Fettweis, H. Levin, and A. Sedlmeyer. Wave Digital Lattice Filters. *International Journal on Circuit Theory and Applications*, 2:203–211, June 1974.

[4] A. Fettweis, J. A. Nossek, and K. Meerkötter. Reconstruction of Signals after Filtering and Sampling Rate Reduction. *IEEE Transactions on Acoustics, Speech and Signal Processing*, ASSP-33(4):893–902, August 1985.

[5] L. Gazsi. Explicit Formulas for Lattice Wave Digital Filters. *IEEE Transactions on Circuits and Systems*, CAS-32(1):68–87, January 1985.

[6] H. Johansson and L. Wanhammar. Design of Bireciprocal Linear-Phase Lattice Wave Digital Filters. *Report LiTH-ISY-R-1877*, August 1996.

[7] I. Kunold. Linear Phase Realization of Wave Digital Filters. *IEEE Transactions on Acoustics, Speech and Signal Processing*, pages 1455–1458, 1988.

[8] M. Lang and T.I. Laakso. Design of Allpass Filters for Phase Approximation and Equalization using LSEE error criterion. *Proc. ISCAS'92, San Diego, CA*, pages 2417–2420, May 1992.

[9] T. Q. Nguyen, T. I. Laakso, and R. D. Koilpillai. Eigenfilter Approach for the Design of Allpass Filters Approximating a Given Phase Response. *IEEE Transactions on Signal Processing*, 42(9):2257–2263, September 1994.

[10] M. Renfors and T. Saramäki. Recursive Nth-Band Digital Filters Part I: Design and Properties. *IEEE Transactions on Circuits and Systems*, CAS-34(1):24–39, January 1987.

[11] M. Renfors and T. Saramäki. Recursive Nth-Band Digital Filters Part II: Design of Multistage Decimators and Interpolators. *IEEE Transactions on Circuits and Systems*, CAS-34(1):24–39, January 1987.

[12] W. Wegener. Wave Digital Directional Filters with Reduced Number of Multipliers and Adders. *Archiv Elektrische Übertragungstechnik*, 33:239–243, June 1979.